Single sink - Stainless Steel

38 180 003

- under-mounted
- 180 x 400 mm
- sink depth 140 mm
- suitable for base units 350 mm
- radius 12 mm

Drain and overflow set not included in the scope of supply. See Required miscellaneous.

Drain and overflow set not included in the scope of supply. See Required miscellaneous.

Required miscellaneous

Pop-up waste and overflow closable by hand - Stainless Steel 10 415 003-85

●3½” drain valve closable by hand

Single sink - Stainless Steel

38 180 003

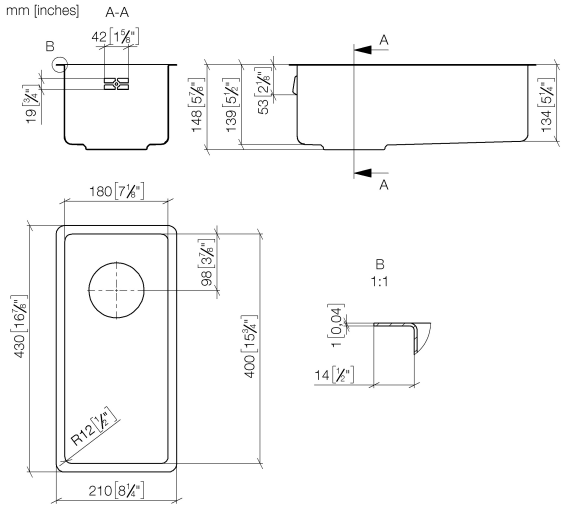

Single sink - Stainless Steel

38 180 003

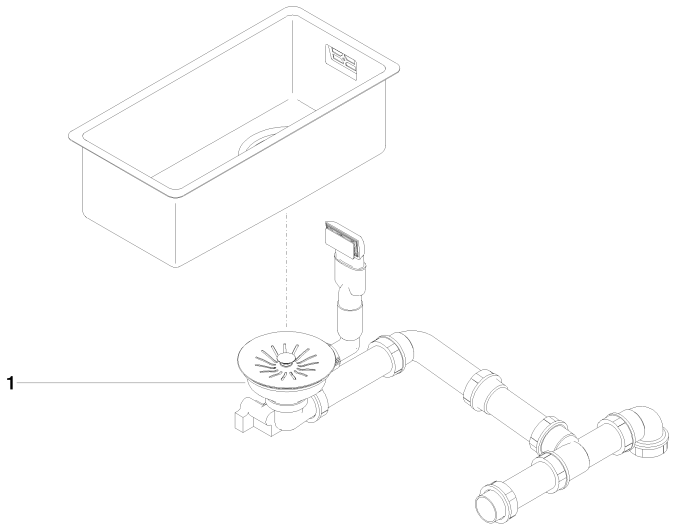

Spare parts list

No.	Item Number	Name	Quantity used	Delivery time
1	10 415 003-85	Pop-up waste and overflow closable by hand - Stainless Steel	1	2